P/N MCK-4225

Cabinet Push Lock, No Cylinder

Cerradura de pulsador para gabinete, sin cilindro

Small push / slam lock without a key cylinder, supplied with a rectangular strike plate. Material is not stated in the catalog. The strike-plate size is not labelled.

Genuine OEM equivalent available on request.

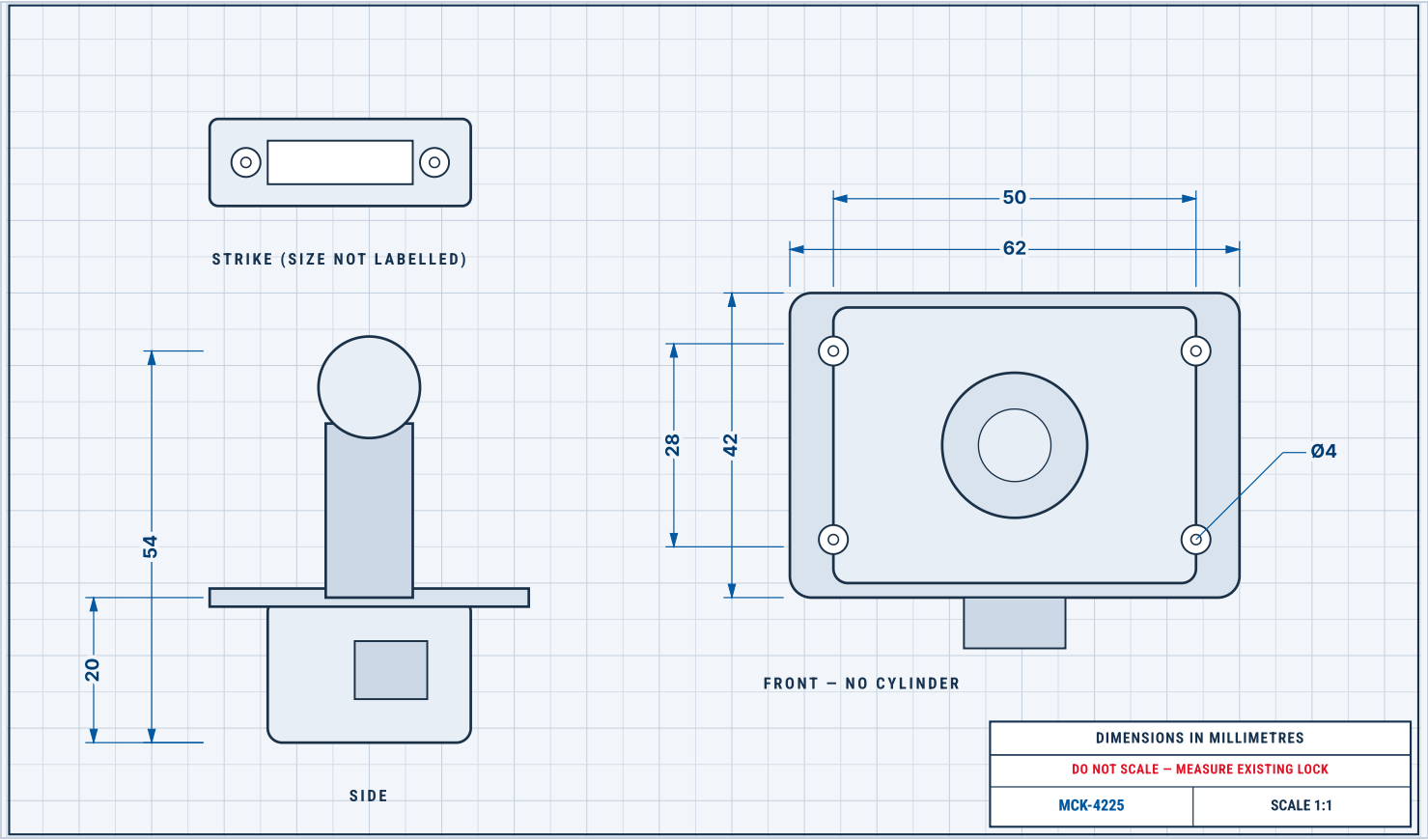

REPLACEMENT DIMENSIONS

Part number	MCK-4225
Type	Cabinet push lock, no cylinder
Material	Not stated — do not assume stainless or zinc
Side overall height	54 mm; 20 mm below / through the flange
Flange / body width	62 mm flange; 50 mm body
Front height	42 mm overall; inner 28 mm
Fixing holes	Ø4 mm
Strike plate	Supplied; size not labelled — measure the existing strike

REPLACEMENT FIT — MEASURE YOUR EXISTING LOCK

- Side 54 mm overall and 20 mm below the flange
- Flange 62 mm and body 50 × 42 / 28 mm
- Fixing holes Ø4 mm
- Confirm no cylinder is required (see MCK-4226 for the keyed version)
- Strike-plate size and material (neither is labelled)

KEY FEATURES

- Push lock, no key cylinder
- Supplied with a rectangular strike plate (size not labelled)
- Material is not stated in the catalog
- Genuine OEM equivalent available on request

PRODUCT

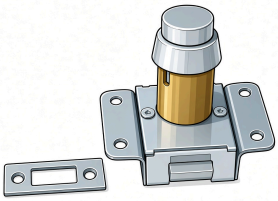

www.mantto.com
sales@mantto.com
+1 956 627 1082