P/N MDL-5100

Marine Cabin Door Lock, Korean-Style Trim

Cerradura de cabina, herraje estilo coreano

Cabin lock with Korean-style trim and a taller forend than C-1 (200 / 180 vs. 190 / 170). Function is equivalent to MDL-C-1: outside cylinder, inside knob, master-key system; windproof inclined latch opened by the lever or the key; square bolt operated by the inside knob and the outside key. Door thickness 36–45 mm.

Genuine OEM equivalent available on request.

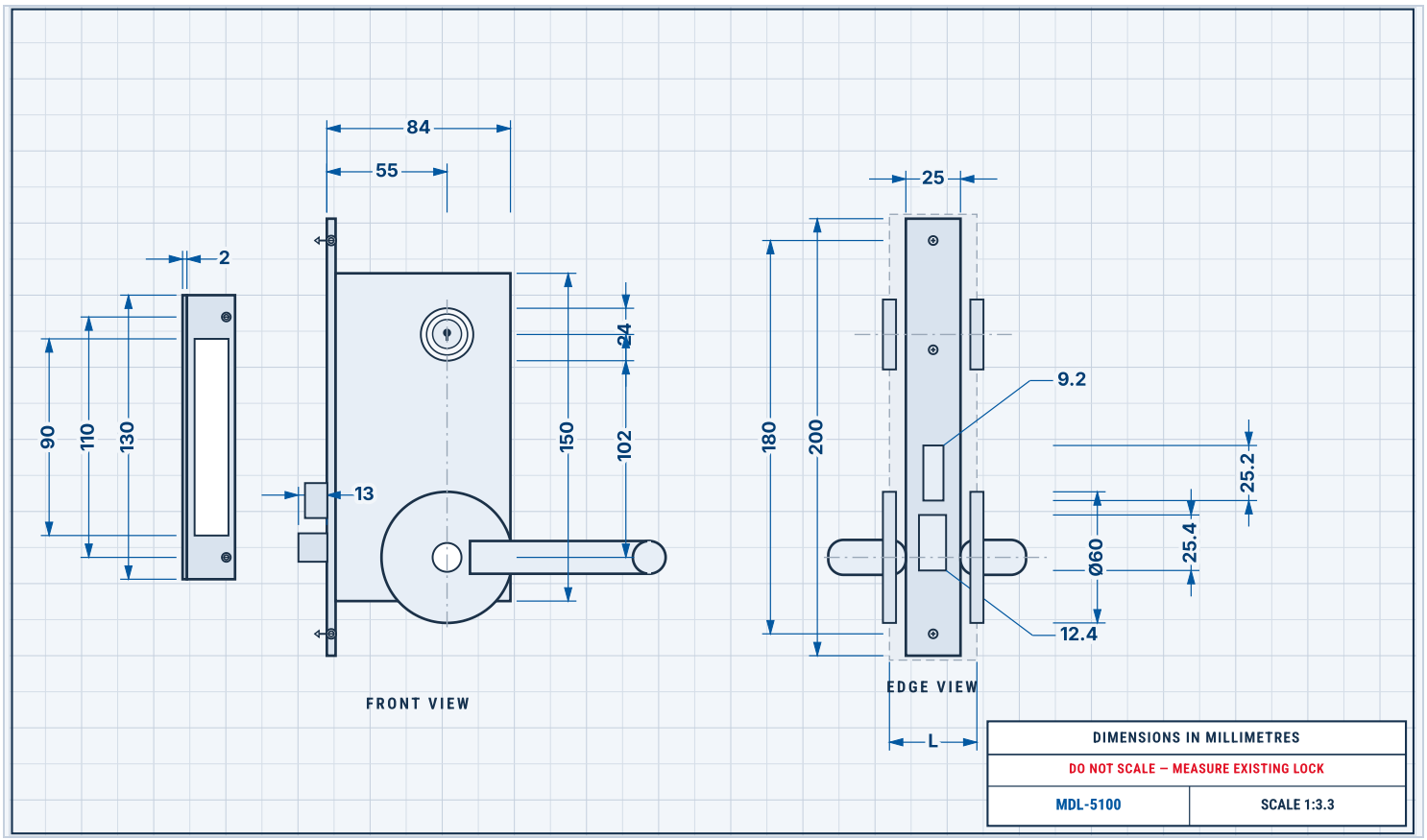

REPLACEMENT DIMENSIONS

Part number	MDL-5100
Type	Cabin mortise lock, Korean-style trim
Door thickness	36–45 mm (L on the edge view is not numbered)
Backset	55 mm
Lock case	84 mm depth (incl. forend); 150 mm labelled on the case / rose span
Forend (faceplate)	200 mm high × 25 mm wide; fixing centres 180 mm (thicker than C-1's 190 / 170; extra holes in the forend)
Forend thickness	Not labelled — measure the existing lock
Strike plate	130 mm high; opening 90 mm; fixing centres 110 mm; lip 2 mm
Latch throw	13 mm (deadbolt throw is not labelled)
Cylinder housing	24 mm; cylinder-to-handle 102 mm
Deadbolt (edge)	25.2 mm high × 9.2 mm wide
Latch (edge)	25.4 mm high × 12.4 mm wide
Spindle size / handing / numeric L	Not labelled — measure the existing lock

REPLACEMENT FIT — MEASURE YOUR EXISTING LOCK

- Door thickness (36–45 mm range; L is not numbered)
- Backset 55 mm and case depth 84 mm
- Forend 200 × 25 mm, centres 180 mm — taller than a C-1 190 / 170 forend
- Strike 130 / 110 / 90 / lip 2
- Latch throw 13 mm; latch 25.4 × 12.4 mm; deadbolt 25.2 × 9.2 mm
- Cylinder-to-handle 102 mm
- Confirm Korean-style trim matches the existing furniture
- Forend thickness, deadbolt throw, spindle and handing (not labelled)

KEY FEATURES

- Korean-style cabin trim; function equivalent to MDL-C-1
- Taller forend than C-1: 200 mm high, fixing centres 180 mm, with extra fixing holes
- Windproof inclined latch and square deadbolt
- Supplied with strike plate

PRODUCT

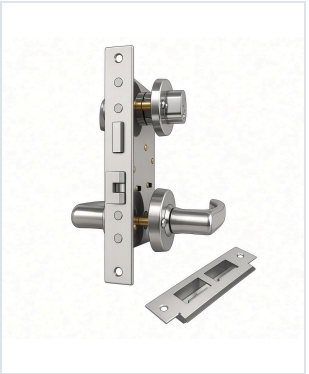

www.mantto.com
sales@mantto.com
+1 956 627 1082