P/N MDL-5105

Marine Passageway Door Lock, Korean-Style Trim

Cerradura de paso, herraje estilo coreano

Passageway lock in the Korean-style 5100 series, with a single inclined latch. Installation size is the same as MDL-5100 (forend 200 / 180). The case has an unused cylinder hole. Door thickness 36–45 mm.

Genuine OEM equivalent available on request.

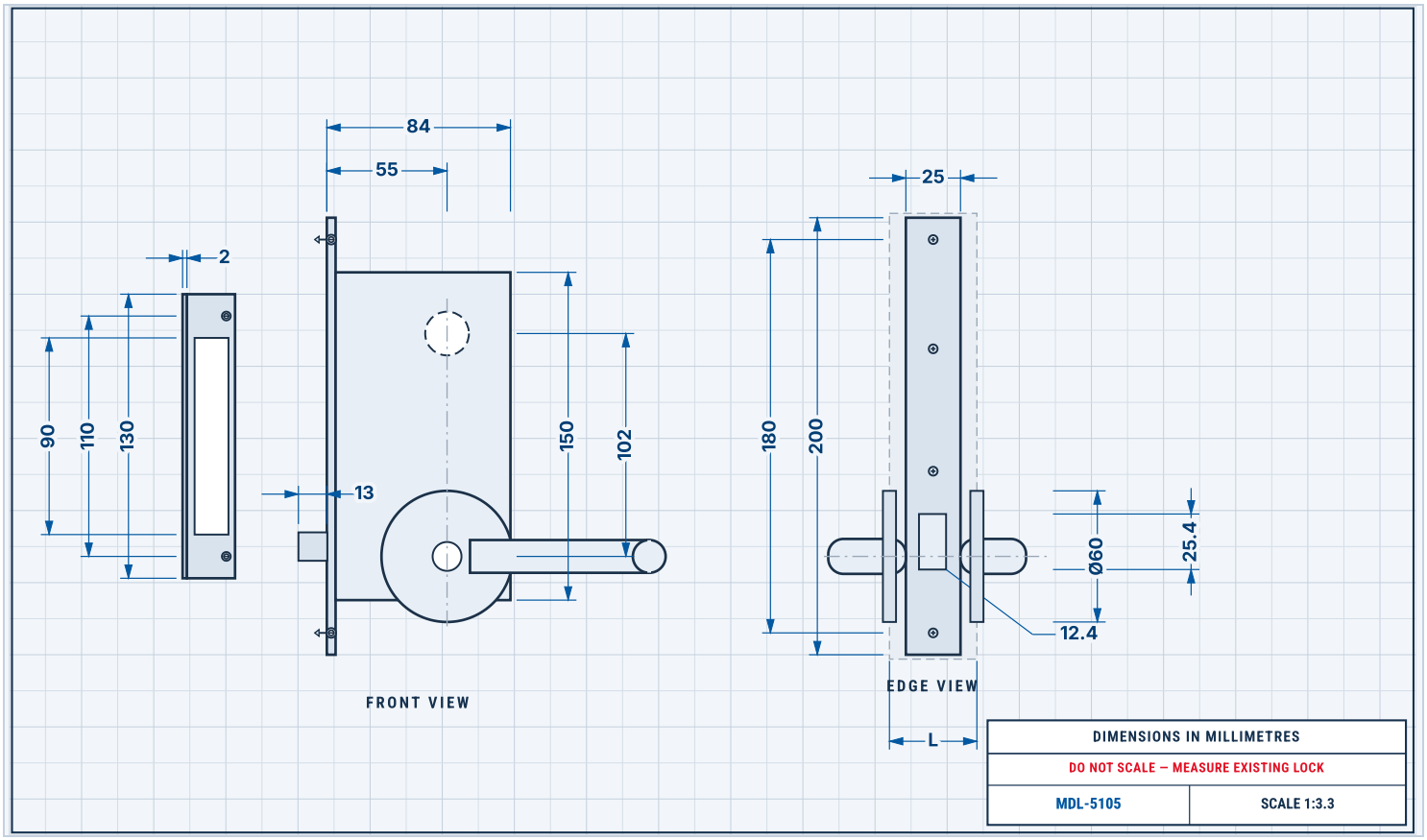

REPLACEMENT DIMENSIONS

Part number	MDL-5105
Type	Passageway mortise lock, Korean-style trim
Door thickness	36–45 mm (L on the edge view is not numbered)
Backset	55 mm
Lock case	84 mm depth (incl. forend); 150 mm labelled on the case / rose span
Forend (faceplate)	200 mm high × 25 mm wide; fixing centres 180 mm
Forend thickness	Not labelled — measure the existing lock
Strike plate	130 mm high; opening 90 mm; fixing centres 110 mm; lip 2 mm
Latch throw	13 mm; latch face 12.4 × 25.4 mm
Upper feature to handle	102 mm (unused cylinder hole in the case)
Spindle size / handing / numeric L	Not labelled — measure the existing lock

REPLACEMENT FIT — MEASURE YOUR EXISTING LOCK

- Door thickness (36–45 mm range; L is not numbered)
- Backset 55 mm and case depth 84 mm
- Forend 200 × 25 mm, centres 180 mm (same install size as MDL-5100; taller than C-1)
- Strike 130 / 110 / 90 / lip 2
- Latch throw 13 mm and face 12.4 × 25.4 mm
- 102 mm from the unused cylinder hole to the handle
- Confirm passageway function (no cylinder / no deadbolt) matches the existing lock
- Forend thickness, spindle size and handing (not labelled)

KEY FEATURES

- Korean-style passageway lock; installation size same as MDL-5100
- Single inclined latch; unused cylinder hole in the case
- Taller 200 / 180 forend, as MDL-5100
- Supplied with strike plate

PRODUCT

