P/N MDL-C-1B

Marine Door Lock with Cabin Hook

Cerradura de embutir con gancho de cabina

Cabin / fire-door mortise lock with an added cabin hook (hold-back / hook). Other features and door thickness as MDL-C-1 (36–45 mm). The hook itself is not dimensioned on the catalog drawing.

Genuine OEM equivalent available on request.

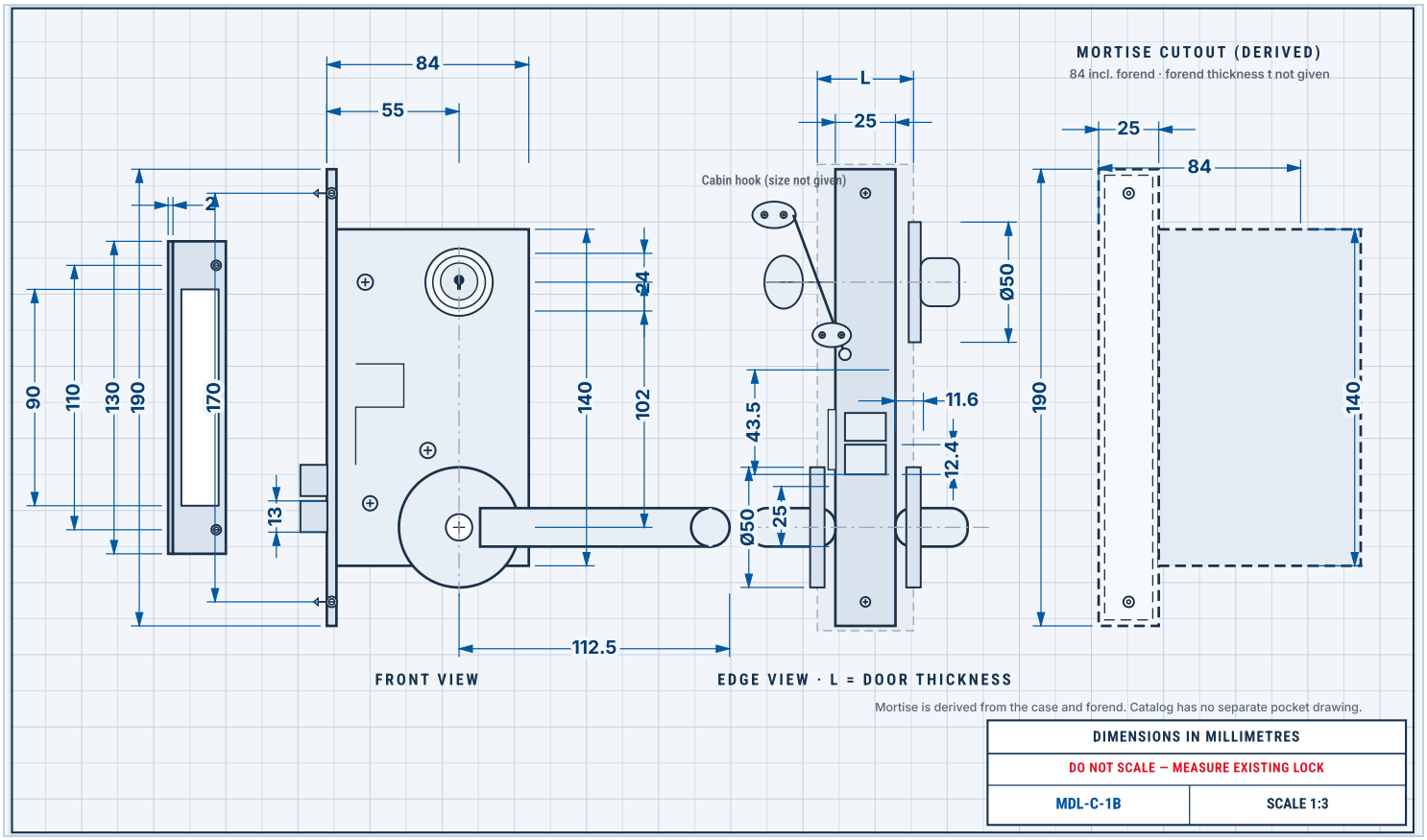

REPLACEMENT DIMENSIONS

Part number	MDL-C-1B
Type	Cabin / fire-door mortise lock with cabin hook
Door thickness	36–45 mm
Backset	55 mm
Lock case	84 mm depth (incl. forend) × 140 mm height
Forend (faceplate)	190 mm high × 25 mm wide; fixing centres 170 mm
Forend thickness	Not labelled (C-1A drawing of the same forend shows 4 mm)
Strike plate	130 mm high; opening 90 mm; fixing centres 110 mm; lip 2 mm
Lever length	112.5 mm
Handle / cylinder roses	Ø50 mm (edge view)
Cabin hook	Shown on the catalog drawing; size not given
Spindle size / handing / throw	Not labelled — measure the existing lock

REPLACEMENT FIT — MEASURE YOUR EXISTING LOCK

- Door thickness (36–45 mm range)
- Backset, forend size and screw centres
- Case size (84 incl. forend × 140 mm)
- Strike height, opening and screw centres
- Handle / rose diameter (Ø50 mm)
- Confirm the existing door has (or needs) a cabin hook
- Hook size — not labelled; measure the existing hook
- Spindle size, handing and bolt throw (not labelled)

KEY FEATURES

- Same lock body as MDL-C-1, with a cabin hook
- Outside cylinder with inside knob; master-key system
- Inclined windproof latch; square deadbolt
- Hook size is not given on the catalog drawing
- Genuine OEM equivalent available on request

PRODUCT

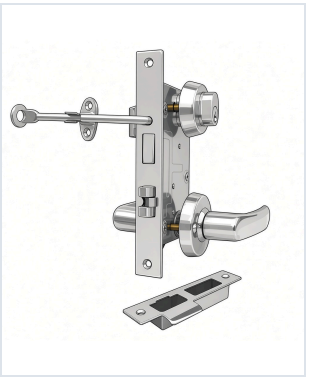

www.mantto.com
sales@mantto.com
+1 956 627 1082