P/N MDL-C-1C

Marine Door Lock, Key Both Sides, No Knob

Cerradura de embutir, llave en ambos lados, sin perilla

Cabin / fire-door mortise lock with bi-directional cylinders of the same keyway, and no inside knob. Opened by key from both inside and outside. Other features as MDL-C-1. Door thickness 36–45 mm. Latch projection 16 mm is labelled on this model.

Genuine OEM equivalent available on request.

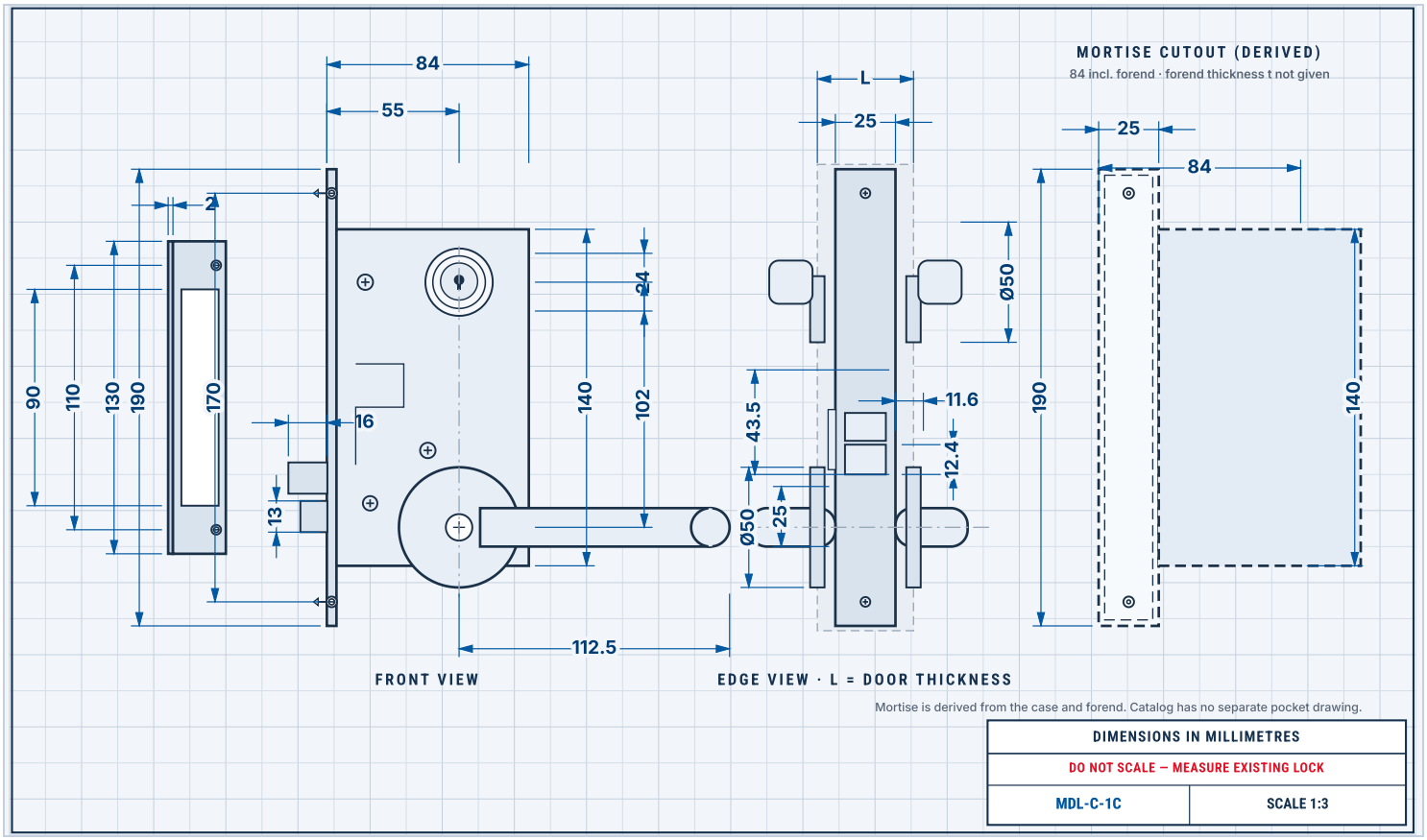

REPLACEMENT DIMENSIONS

Part number	MDL-C-1C
Type	Cabin / fire-door mortise lock, key both sides, no knob
Door thickness	36–45 mm
Backset	55 mm
Lock case	84 mm depth (incl. forend) × 140 mm height
Forend (faceplate)	190 mm high × 25 mm wide; fixing centres 170 mm
Forend thickness	Not labelled (C-1A drawing of the same forend shows 4 mm)
Strike plate	130 mm high; opening 90 mm; fixing centres 110 mm; lip 2 mm
Lever length	112.5 mm
Handle / cylinder roses	Ø50 mm (edge view)
Latch throw	16 mm (labelled on this model)
Spindle size / handing	Not labelled — measure the existing lock

REPLACEMENT FIT — MEASURE YOUR EXISTING LOCK

- Door thickness (36–45 mm range)
- Backset, forend size and screw centres
- Case size (84 incl. forend × 140 mm)
- Strike height, opening and screw centres
- Latch throw 16 mm vs. existing strike pocket
- Confirm key-both-sides (no inside knob) matches the existing lock
- Handle / rose diameter (Ø50 mm)
- Spindle size and handing (not labelled)

KEY FEATURES

- Key operation from both sides; no inside knob
- Same keyway both sides
- Otherwise as MDL-C-1 (master-key system, windproof latch)
- Latch throw 16 mm is labelled on this model
- Genuine OEM equivalent available on request

PRODUCT

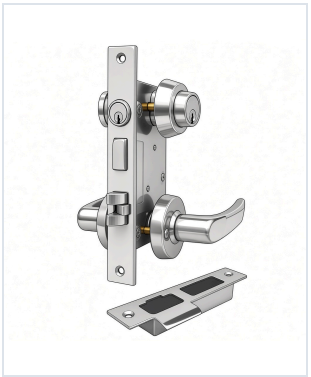

www.mantto.com
sales@mantto.com
+1 956 627 1082