MANTTO OFFSHORE
WWW.MANTTO.COM

PRODUCT SPECIFICATION SHEET
MDL-C-5A

P/N MDL-C-5A

Marine Deadbolt Lock (Catalog text: sliding doors)

Cerradura de pestillo cuadrado (texto de catálogo: puertas corredizas)

Catalog text describes this lock for sliding doors 36–45 mm thick. The photograph and dimensioned drawing show a square deadbolt body, not a hook-bolt sliding lock (see MDL-C-3 / MDL-2910). Single deadbolt; thumbturn one side and cylinder the other. Confirm the existing door type before ordering.

Genuine OEM equivalent available on request.

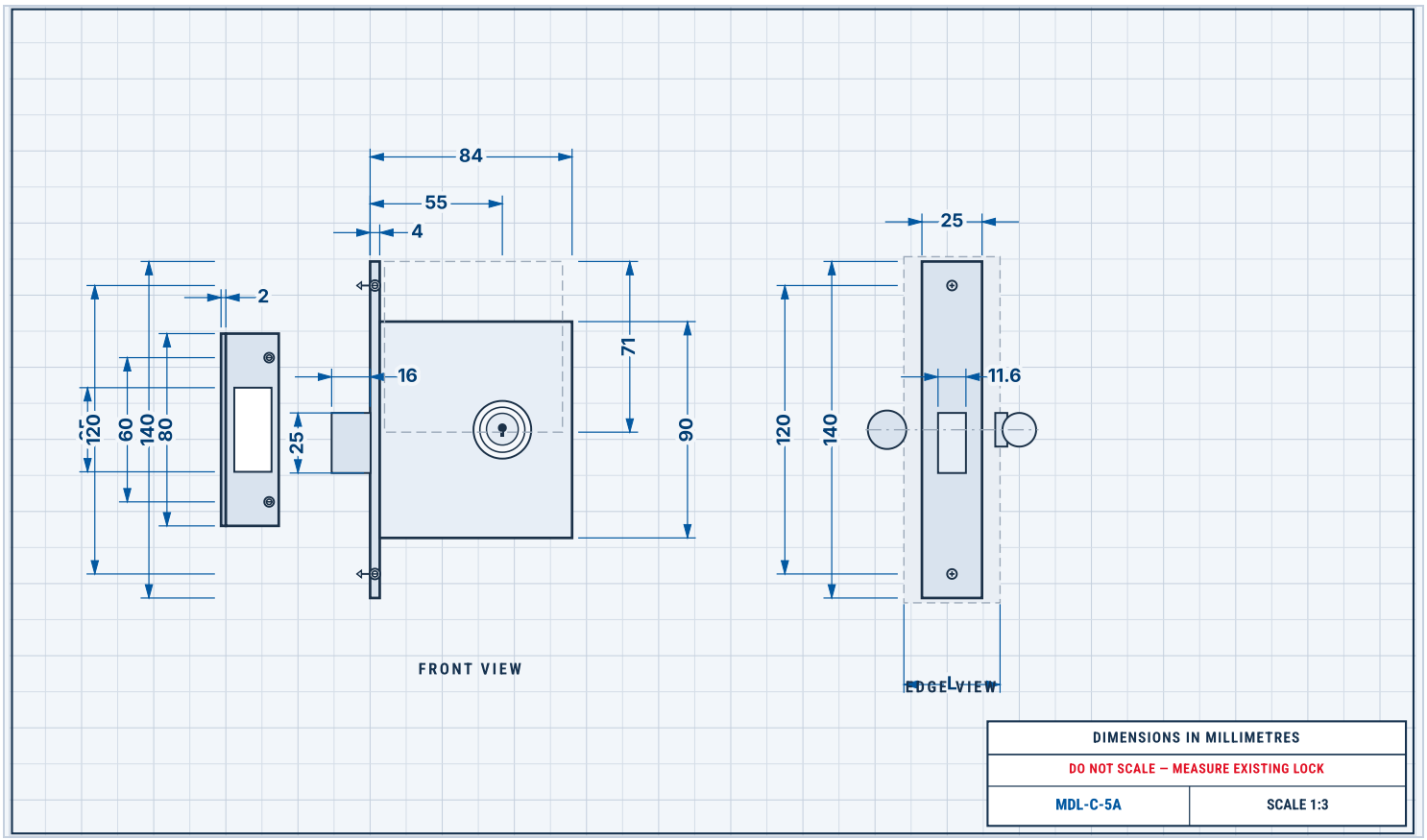

REPLACEMENT DIMENSIONS

Part number	MDL-C-5A
Type	Mortise-style square deadbolt (catalog text: sliding doors)
Important	Not a hook-bolt sliding lock. Compare with MDL-C-3 / MDL-2910 and confirm the door type.
Door thickness	36–45 mm in the catalog text (L is not numbered on the edge view)
Backset	55 mm
Lock case	84 mm depth (incl. forend) × 90 mm height
Forend (faceplate)	140 mm high × 25 mm wide; thickness 4 mm; fixing centres 120 mm
Strike plate	80 mm high; opening 35 mm; fixing centres 60 mm; lip 2 mm
Deadbolt	25 mm high; throw 16 mm
Upper box	71 mm labelled above the bolt
Edge bolt width	11.6 mm
Spindle / handing / numeric L	Not labelled — measure the existing lock

REPLACEMENT FIT — MEASURE YOUR EXISTING LOCK

- Confirm the existing door type: sliding hook-bolt vs. this square deadbolt body
- Door thickness (catalog text 36–45 mm; L is not numbered)
- Backset 55 mm and case 84 × 90 mm
- Forend 140 × 25 × 4 mm, centres 120 mm
- Strike 80 / 60 / 35 / lip 2
- Deadbolt 25 mm high, throw 16 mm, edge width 11.6 mm
- 71 mm upper-box dimension vs. the existing body
- Spindle size and handing (not labelled)

KEY FEATURES

- Catalog text: for sliding doors 36–45 mm thick — confirm the door type before ordering
- The drawing is a mortise-style square deadbolt (forend + case 84 / 55 / 90), not a hook-bolt slider
- Thumbturn one side, cylinder the other
- Supplied with strike plate

PRODUCT



www.mantto.com
sales@mantto.com
+1 956 627 1082